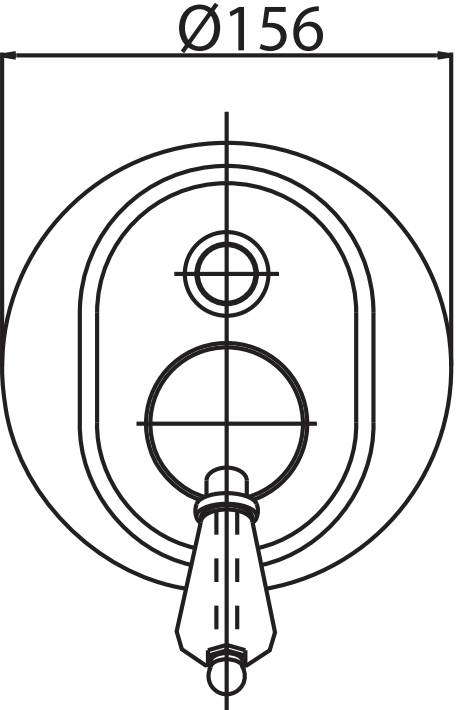
Ø156

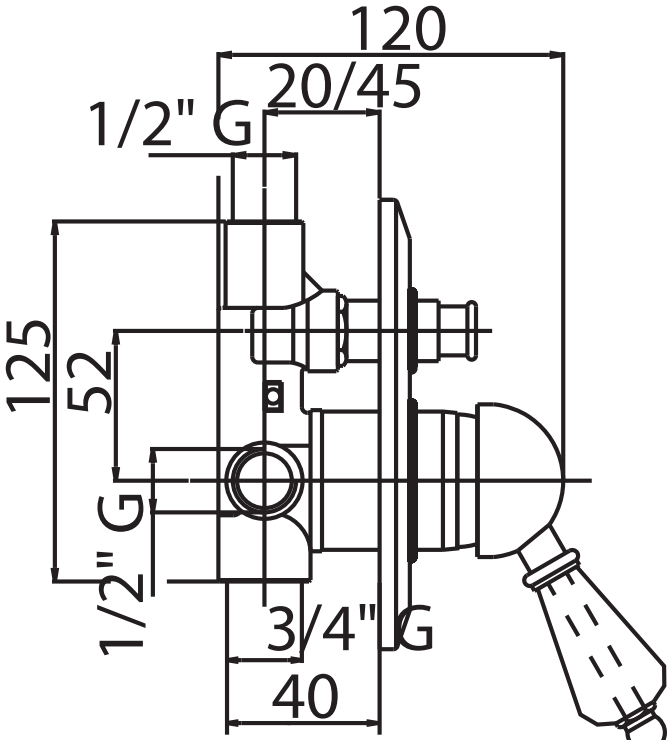
120
20/45
1/2" G
125
52
1/2" G
3/4" G
40