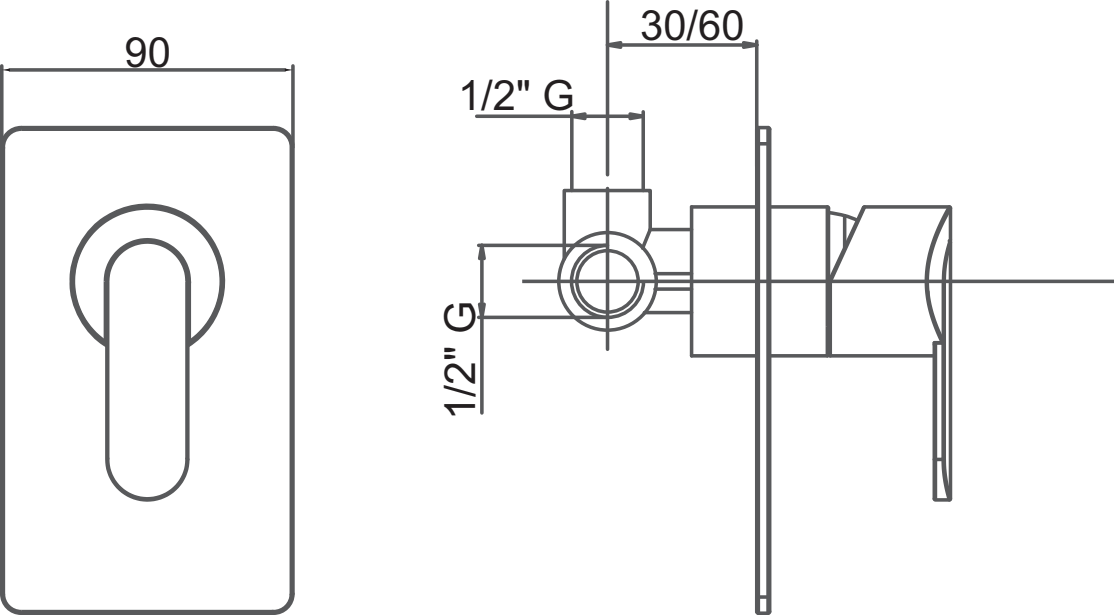
90
30/60
1/2" G
1/2" G