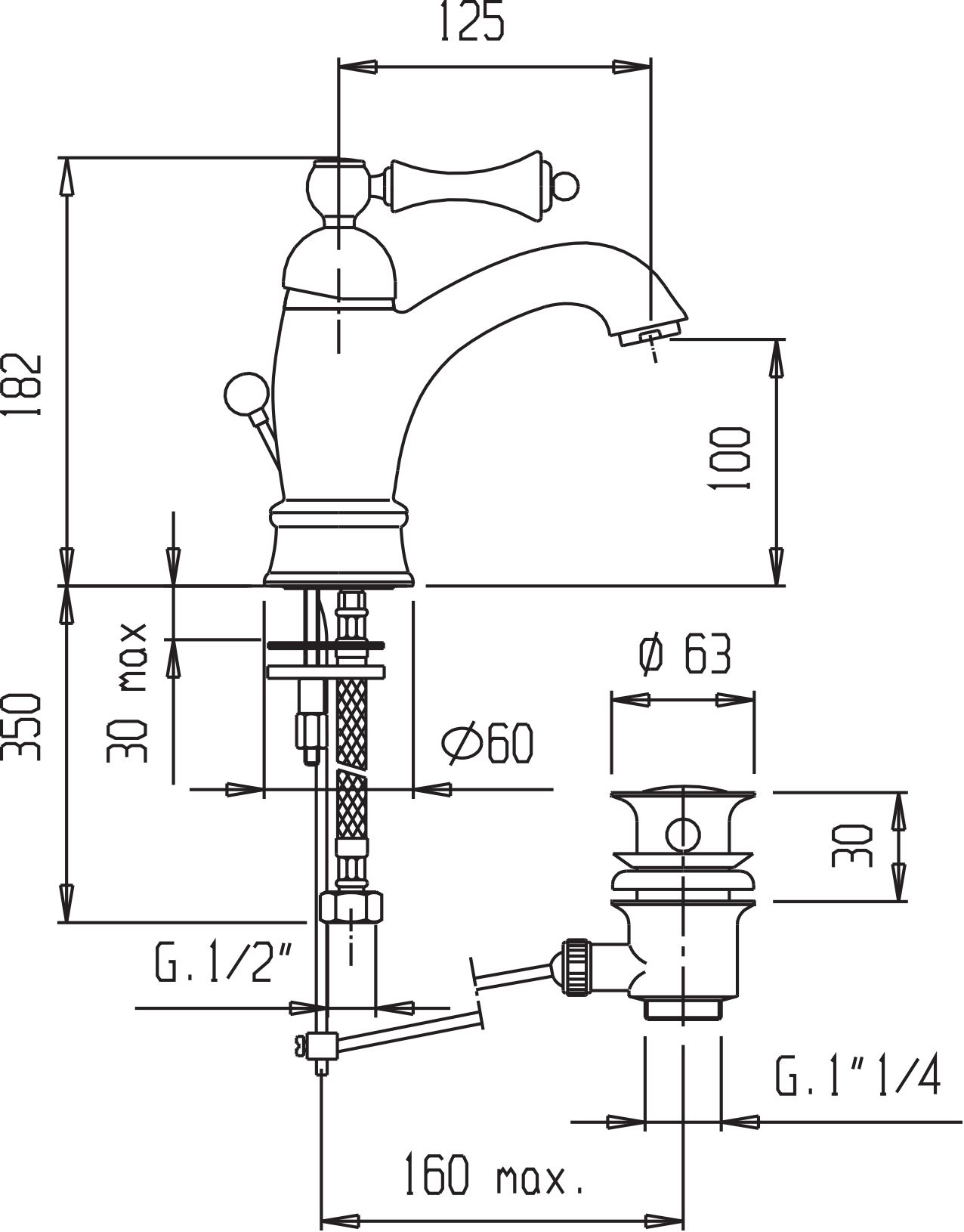
125
182
100
350
30 max
Ø60
Ø 63
30
G.1/2"
G.1"1/4
160 max.