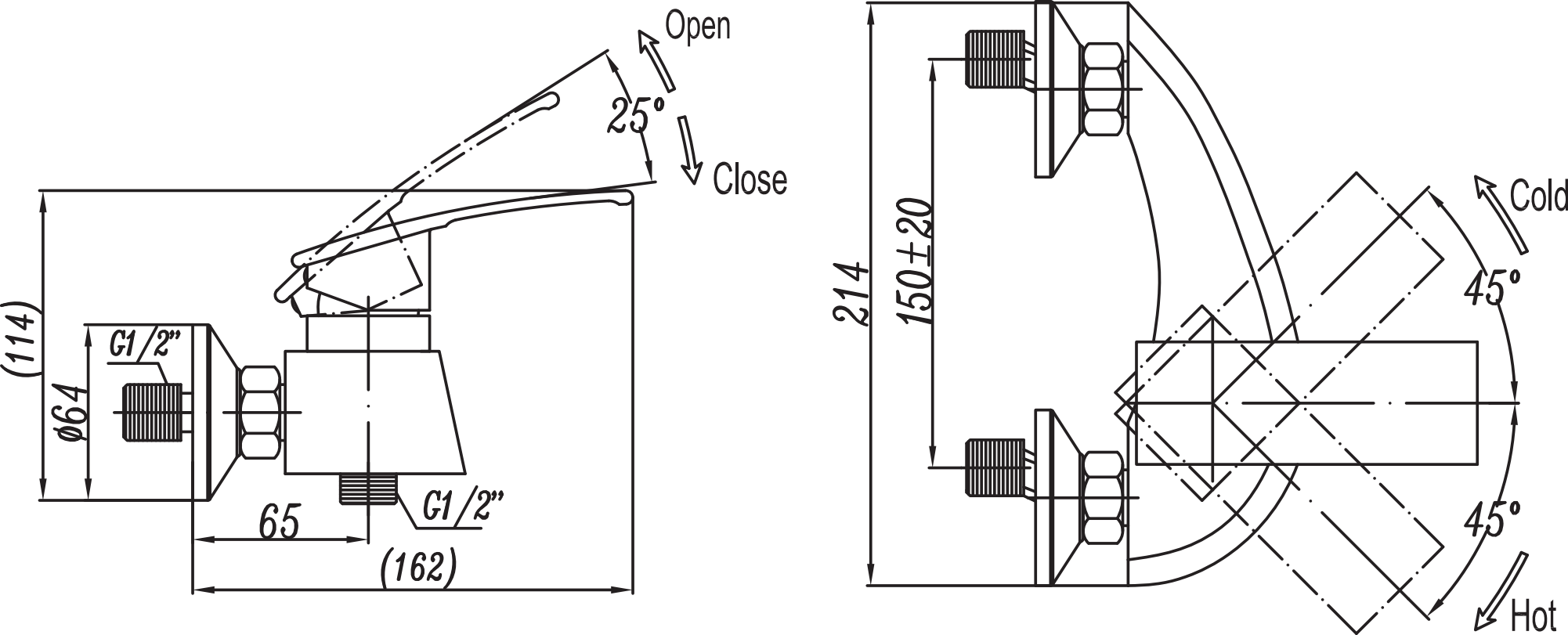
Open
25°
Close
(114)
G1/2"
ϕ64
65
G1/2"
(162)
214
150±20
Cold
45°
45°
Hot