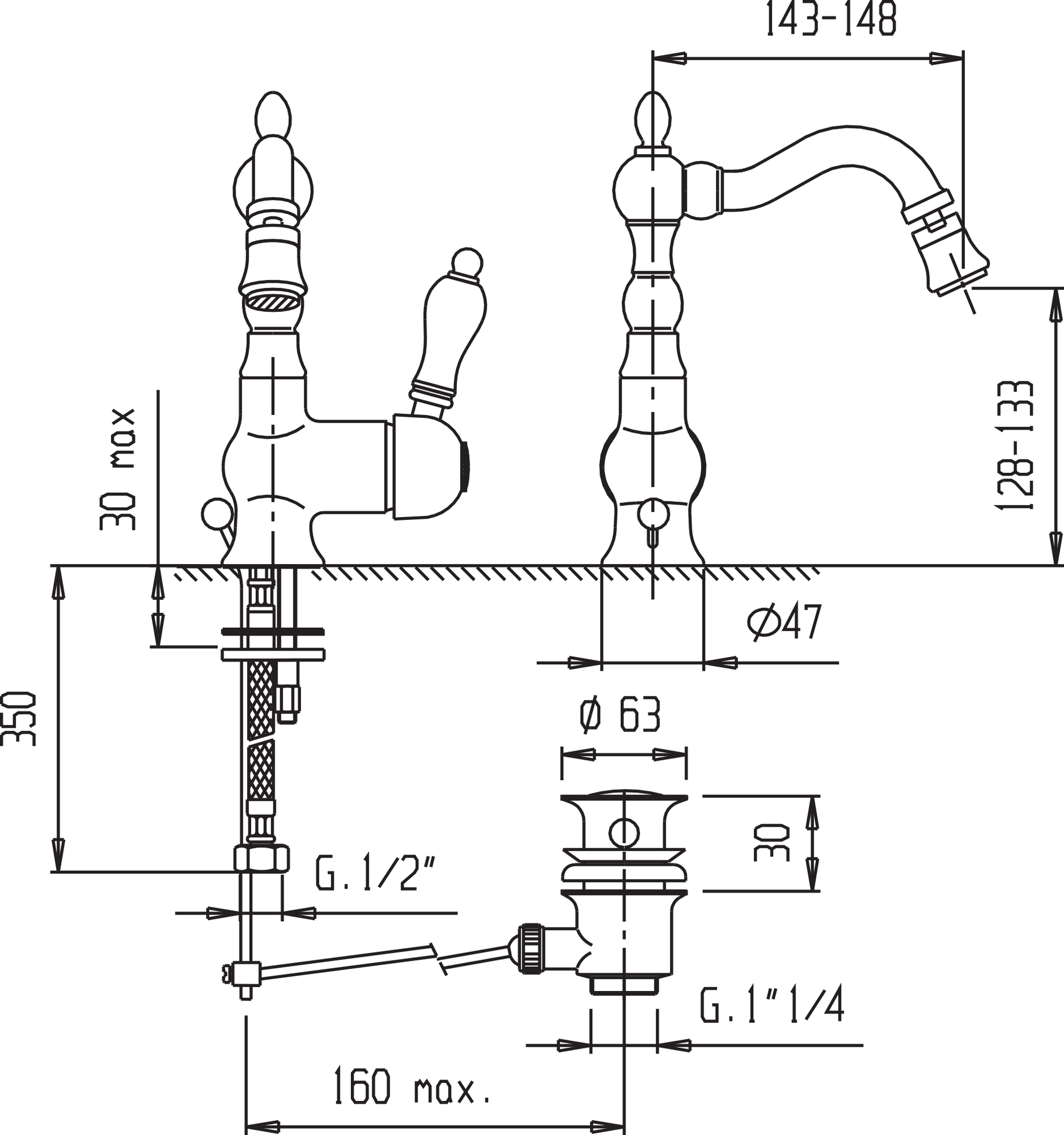
143-148
128-133
30 max
350
Ø47
Ø 63
30
G.1/2"
G.1"1/4
160 max.